Amintiri Feroviare

2023

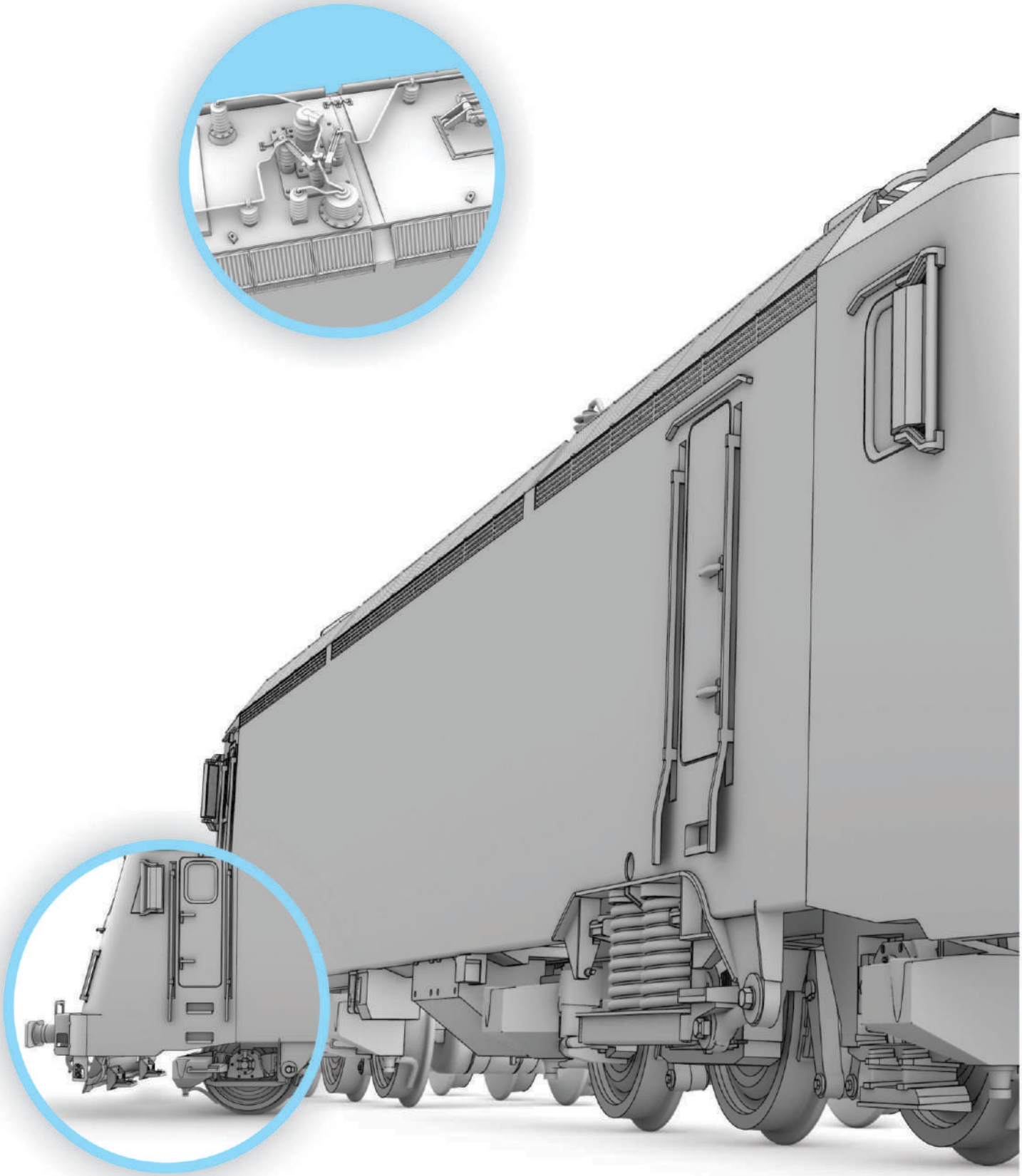

AF MODELS

TRANSMONTANA

SOFTRONIC

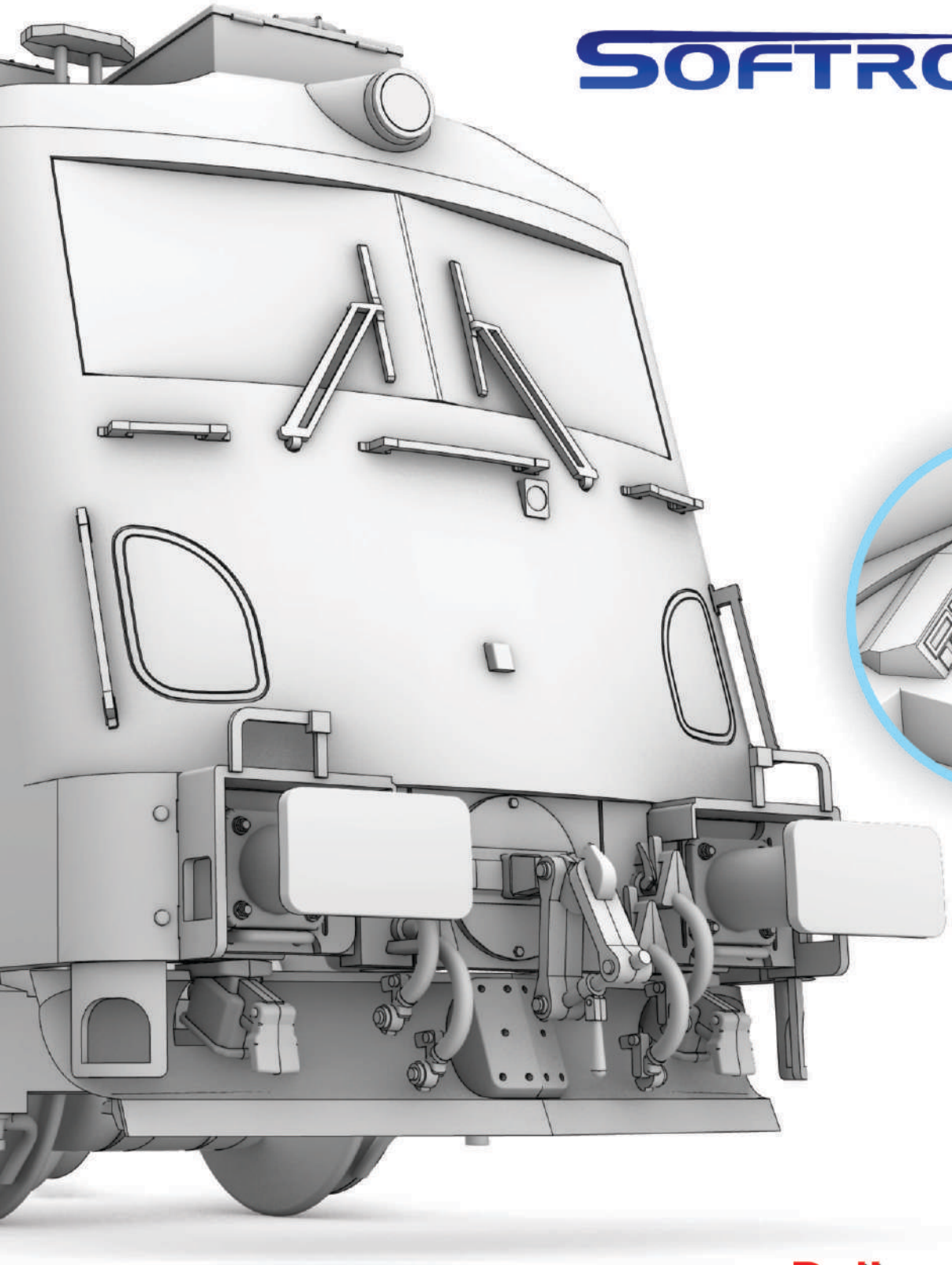

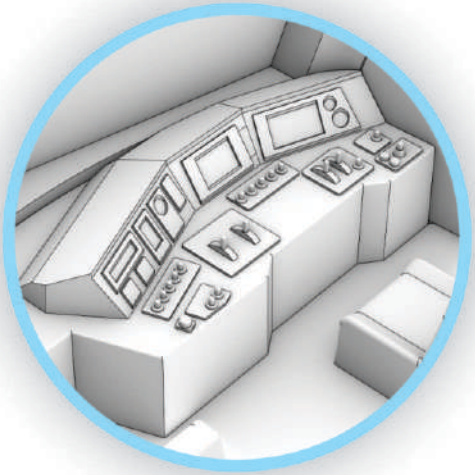

Delivery 2023

MODELS

HTE-12003 NEW

Locomotiva electrica "TransMontana" apartinand operatoruli privat Cargo Trans Vagon.
Epova VI.
Electrical locomotive "TransMontana" of the private operator Cargo Trans Vagon.
Epoch VI.

HOBBY TRAINS & ELECTRONICS SRL
TRENULIST
EXCLUSIV
www.trenulist.ro

10200 NEW

19200 NEW

Locomotiva electrica "TransMontana" apartinand operatoruli privat DB Cargo Romania.

Electrical locomotive "TransMontana" of the private operator BD Cargo Romania

10201 NEW

19201 NEW

Locomotiva electrica "TransMontana" apartinand operatoruli privat Vest Trans Rail.

Electrical locomotive "TransMontana" of the private operator Vest Trans Rail

MODELS

10101 NEW

Locomotiva diesel 060-DA-222 apartinand CFR. Epoca IV.
Diesel locomotive 060-DA-222 of the CFR. Epoch IV.

19101 NEW

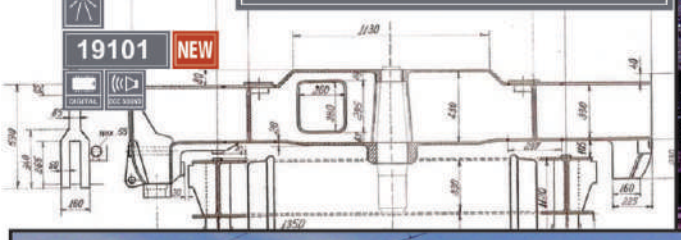

10102 NEW

Locomotiva diesel 62-0548-8 apartinand CFR Calatori. Epoca V.
Diesel locomotive 62-0548-8 of the CFR Calatori Epoch V.

19102 NEW

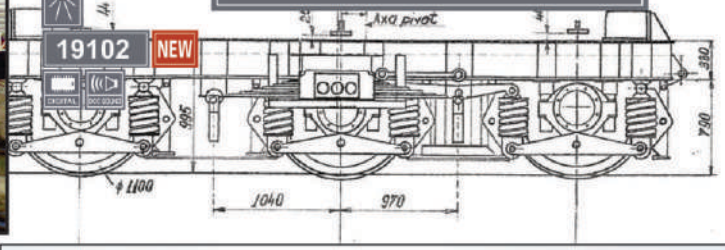

10103 NEW

Locomotiva diesel 60-0362-8 apartinand CFR Infrastructura. Epoca V.
Diesel locomotive 60-0362-8 of the CFR Infrastructura. Epoch V.

19103 NEW

10054 NEW

Locomotiva electrica EA3000 Bulmarket 86 002.Epoca VI.
Electrical locomotive EA3000 Bulmarket 86 002.EpochVI.

19054 NEW

10053 NEW

Locomotiva electrica EA3000 DB CARGO Bulgaria 86 019. Epoca VI.
Electrical locomotive EA3000 DB CARGO Bulgaria 86 019. EpochVI.

19053 NEW

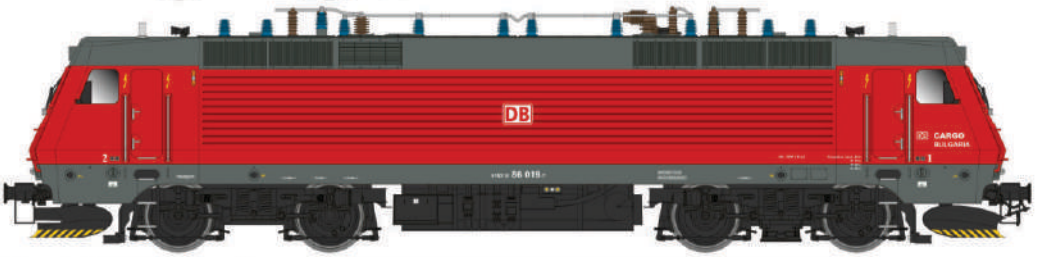

10055 NEW

19055 NEW

Locomotiva electrica EA3000 DB CARGO Bulgaria 86 018. Epoca VI. Model nemotorizat cu numar diferit.
Electrical locomotive EA3000 DB CARGO Bulgaria 86 018. EpochVI. Dummy version with other road number.

L12002 NEW

Locomotiva cu aburi CFR, 150.1067, apartinand depoului Pitesti Ex Br52. Modelul reprezinta stadiul locomotivei la inceputul anilor 50 imediat dupa terminarea WW2 fara cazanul de pacura, cu inscriptii tipice CFR vopsite.
CFR steam locomotive, Type 150.1067, Ex Br52, Pitesti depo. The model represents the status of the locomotive right before WW2, with no petrol tank.

LILIPUT

TILLIG BAHN

502232 NEW

Vagon cuseta de clasa a-IIa,de tipul Y/B70, CFR. Epoca V.

Second class couchette car, type Y/B70 of the CFR. Epoch V.

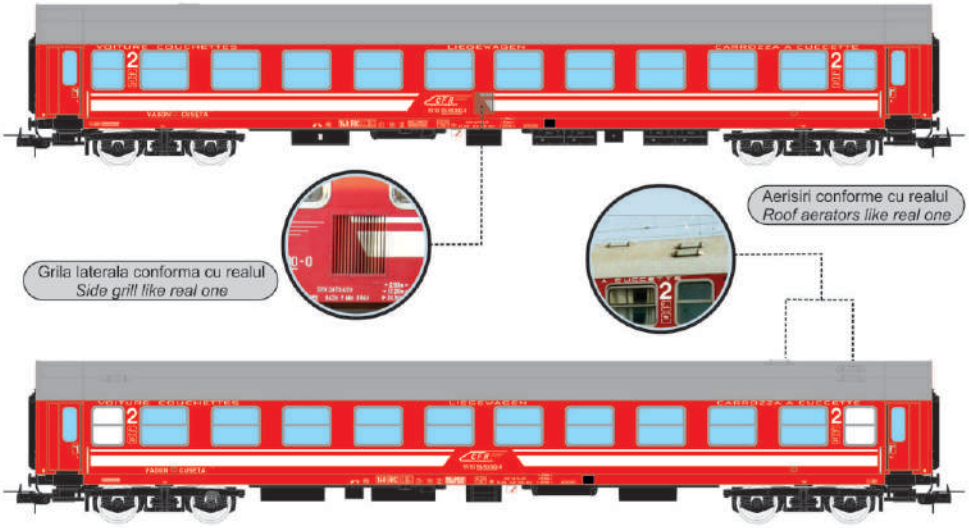

502233 NEW

Vagon cisterna CFR Romania inchiriat societatii private Concordia. Epoca III.

Tank wagon CFR Romania rented to Concordia Epoch III.

AF MODELS

10032 NEW

CFR 228 NEM V =DC NEM NEM 652 PluX 22 NEM 658

19032 NEW

DIGITAL DCC SOUND

Locomotiva electrica 060-EA apartinand CFR Infrastructura. Epoca V.

Electrical locomotive 060-EA of the CFR Infrastructura. Epoch V.

10033 NEW

CFR 228 NEM V =DC NEM NEM 652 PluX 22 NEM 658

19033 NEW

DIGITAL DCC SOUND

Locomotiva electrica 060-EA apartinand CFR Infrastructura. Epoca V.

Electrical locomotive 060-EA of the CFR Infrastructura. Epoch V.

10028 NEW

CFR 228 NEM VI =DC NEM NEM 652 PluX 22 NEM 658

19028 NEW

DIGITAL DCC SOUND

Locomotiva electrica 060-EA apartinand CFR Calatori. Epoca VI.

Electrical locomotive 060-EA of the CFR Calatori. Epoch VI.

AF MODELS

ESU

20014 NEW

Vagon de clasa a doua Tpul AVA200 cu compartimente apartinand CFR. Versiunea rosie cu inscriptii RO-CFR CALATORI - Epoca V.
Second class coach Type AVA200 of the CFR. Red livery with inscription RO-CFR CALATORI - Epoch V

FOTO: Mircea Dorobantu

20015 NEW
20016 NEW
Numar diferit/Other diferent number

Vagon de clasa a doua Tpul AVA200 cu compartimente apartinand CFR. Versiunea albastra - Epoca V.
Second class coach Type AVA200 of the CFR. Blue livery - Epoch V.

EXCLUSIV

HGD- 11003 NEW

Vagon de clasa a doua Tpul AVA200 cu compartimente apartinand CFR. Versiunea rosie cu logo CFR vechi - Epoca V.
Second class coach Type AVA200 of the CFR. Red livery with old CFR logo- Epoch V.

20070 NEW

Vagon cuseta Ex DB, tipul Bcm apartinand CFR. Versiunea rosie - Epoca V.
Couchette car type Bcm of the CFR. Red livery - Epoch V.

20071 NEW

Vagon cuseta Ex DB, tipul Bcm apartinand CFR. Versiunea ralbastra cu ramele geamurilor albastre - Epoca V.
Couchette car type Bcm of the CFR. Blue livery - Epoch V.

20072 NEW

Vagon cuseta Ex DB, tipul Bcm apartinand CFR. Versiunea ralbastra cu ramele geamurilor gri - Epoca V.
Couchette car type Bcm of the CFR. Blue livery - Epoch V.

Exact-train
Classic HO1:87®

EX20951 NEW

Set de doua vagoane de tipul Ggs cu pereti de scandura, CFR. Epova IV.
Set with two Ggs wagon with plank wood walls, CFR. Epoch IV

Manere metalice si o multitudine de piese din fotodecupaj
Grilaje laterale din fotodecupaj perforate
Usi laterale ce se deschid
Sasiu din metal
Tampoane cu arc

Metal handrails and a lot of photoetched parts
Photoetched cutout side grids
Opening side doors
Metal chassis
Spring bufers

EX20953 NEW

Set de doua vagoane de tipul Ggs cu pereti de scandura, CFR Marfa. Epoca V.
Set with two Ggs wagon with plank wood walls, CFR Marfa. Epoch V.

EX20959 NEW

Vagon de tipul Ggs cu pereti de scandura, CFR Marfa. Epoca V.
Ggs wagon with plank wood walls, CFR Marfa. Epoch V.

Toate vagoanele Ggs sunt diferite intre ele prin forma, pozitia si culoarea inscriptiilor,date de revizie diferite, pozitia grilelor diferita(Inchis-Deschis)

All Ggs wagons are different from each other in shape, position and color of the inscriptions, different revision dates, different grid position (Closed-Open)

EX20952 NEW

Vagon de tipul Ggs cu pereti de scandura, CFR. Epoca IV.
Ggs wagon with plank wood walls, CFR. Epoch IV.

30002

Vagon frigorific apartinad CFR, ex FS, seria RFWZ, - Epoca III
Refrigrated wagon of the CFR, former FS. Epoch III

25007 NEW

ATC | 303 | NEM | VI

Set de trei vagoane, unul de clasa a doua si doua de dormit de Tipul AVA 200 pentru trafic intern şi extern ASTRA TRANS CARPATIC

Set of three coaches, one 2nd and two sleep car Type AVA 200, for internal and international service ASTRA TRANS CARPATIC

30006 NEW

P | 175 | NEM | V

Vagon cisterna de tipul Zackks pentru transport amoniac amhidru - Epoca V.
Tank wagon Type Zackks - Epoche V

30013 NEW

P | 175 | NEM | V

Vagon cisterna de tipul Zackks pentru transport amoniac amhidru - Epoca V.
Tank wagon Type Zackks - Epoche V

Craft&Hobby

www.craftandhobby.ro

info@craftandhobby.ro

Amintiri Feroviare vine in sprijinul dumneavoastra cu magazinul on-line **Craft&Hobby.ro**

Acest portal va pune la dispozitie pe langa toate produsele si piesele de schimb din gama proprie o serie intreaga de produse de la cele mai cunoscute brand-uri de modelism.

Amintiri Feroviare comes to support you with the new online shop **Craft&Hobby.ro**

This portal will provide you all our products and replacement parts but also a lot of products from the most of famous modelling brands.

30014 NEW

P | 175 | NEM | V

Vagon cisterna de tipul Zackks apartinand GFR - Epoca V.
Tank wagon Type Zackks of the GFR- Epoche V

HGD-11004 NEW

P | 175 | NEM | V

Vagon cisterna de tipul Zackks apartinand Rompetrol
Epoca V.
Tank wagon Type Zackks of the Rompetrol- Epoche V

HTE-001 NEW

P | 175 | NEM | V

Vagon cisterna de tipul Zackks apartinand Petrom
Epoca V.
Tank wagon Type Zackks of the Petrom- Epoche V

Amintiri Feroviare este distribuitor autorizat in Romania pentru aceste marci:

A.C.M.E. · TILLIG BAHN · LILIPUT · shesto Trusted for quality, since 1907 · BACHMANN EUROPE Plc · PROSES Model Railway Accessories · WOODLAND SCENICS® · Exact-train Classic H0 1:87®

Cartea completă despre cea mai populară locomotivă electrică din România care a schimbat intreaga istorie feroviară a căilor ferate Romane

Mircea Dorobanţu

Locomotiva 060-EA *40 de ani de la fabricarea primei locomotive eletrice in Romania*

Volum in format mare cu fotografii si desene inedite, alb/negru si color

060-EA Locomotive - 40 years from first electric locomotive built in Rumenia

Hardcover book with unpublished BW and colour photos and drawings

AMINTIRI FEROVIARE S.r.l.
Str. Erou Slt. Olaru Cristian, Nr.34, Barlad, Romania, 731076
www.amintiriferoviare.com info@amintiriferoviare.com
tel/fax: +40 235415838